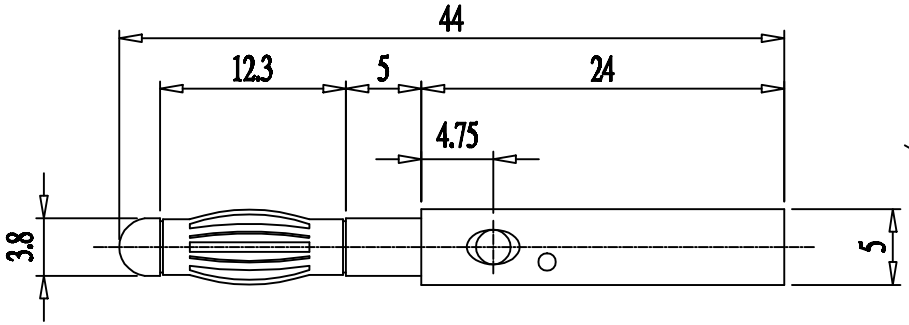

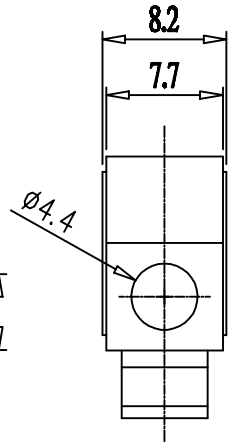

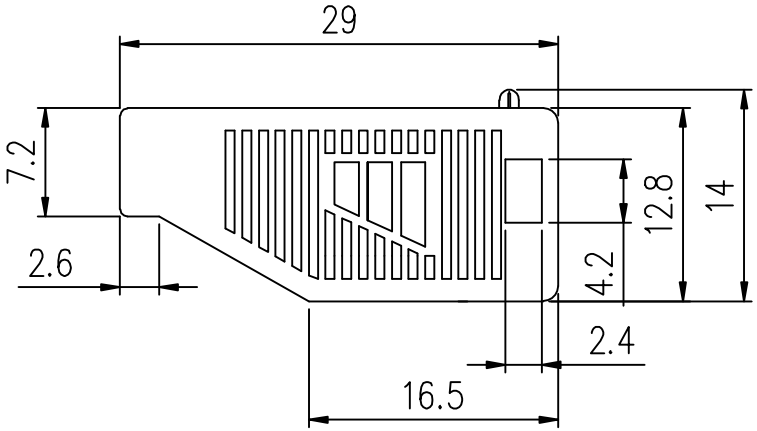

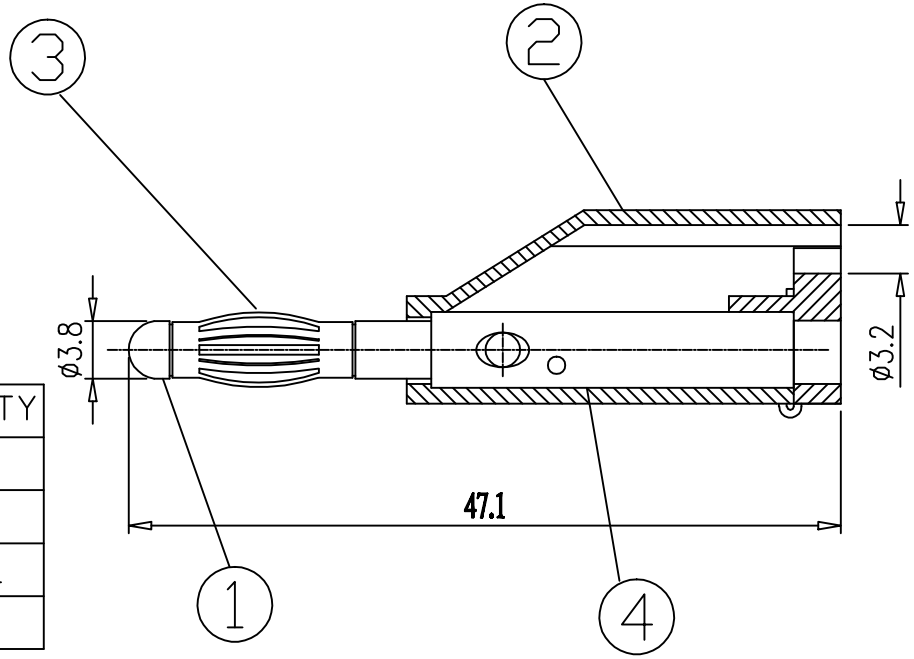

Rating : 10A AC500V

NO	DESCRIPTION	MATERIAL	QTY
1	PLUG	COPPER ALLOY C3604, NICKEL	1
2	HOUSING	NYLON 66	1
3	SPRING	BERYLLIUM COPPER, NICKEL	1
4	JACK	COPPER ALLOY C3604, NICKEL	1

TOLERANCES
0.5MM-5MM=±0.2MM
5MM-30MM=±0.4MM
30MM-120MM=±0.6MM
120MM-315MM=±1.0MM
315MM-1000MM=±1.6MM
1000MM-2000MM=±2.4MM

		核準日期 Date	設計 Designed By	比例尺 Scale			REF.NO.
		26 JUN 2003	C.J HUANG	2:1	大廣有限公司	1005	
		核準 Approved By	繪圖 Drew By	單位 UNIT	DA KOANG CO., LTD.	4MM BANANA PLUG	
修正日期	修正說明	J.F. WANG	C.T WANG	m/m		NICKEL PLATED, ROHS	