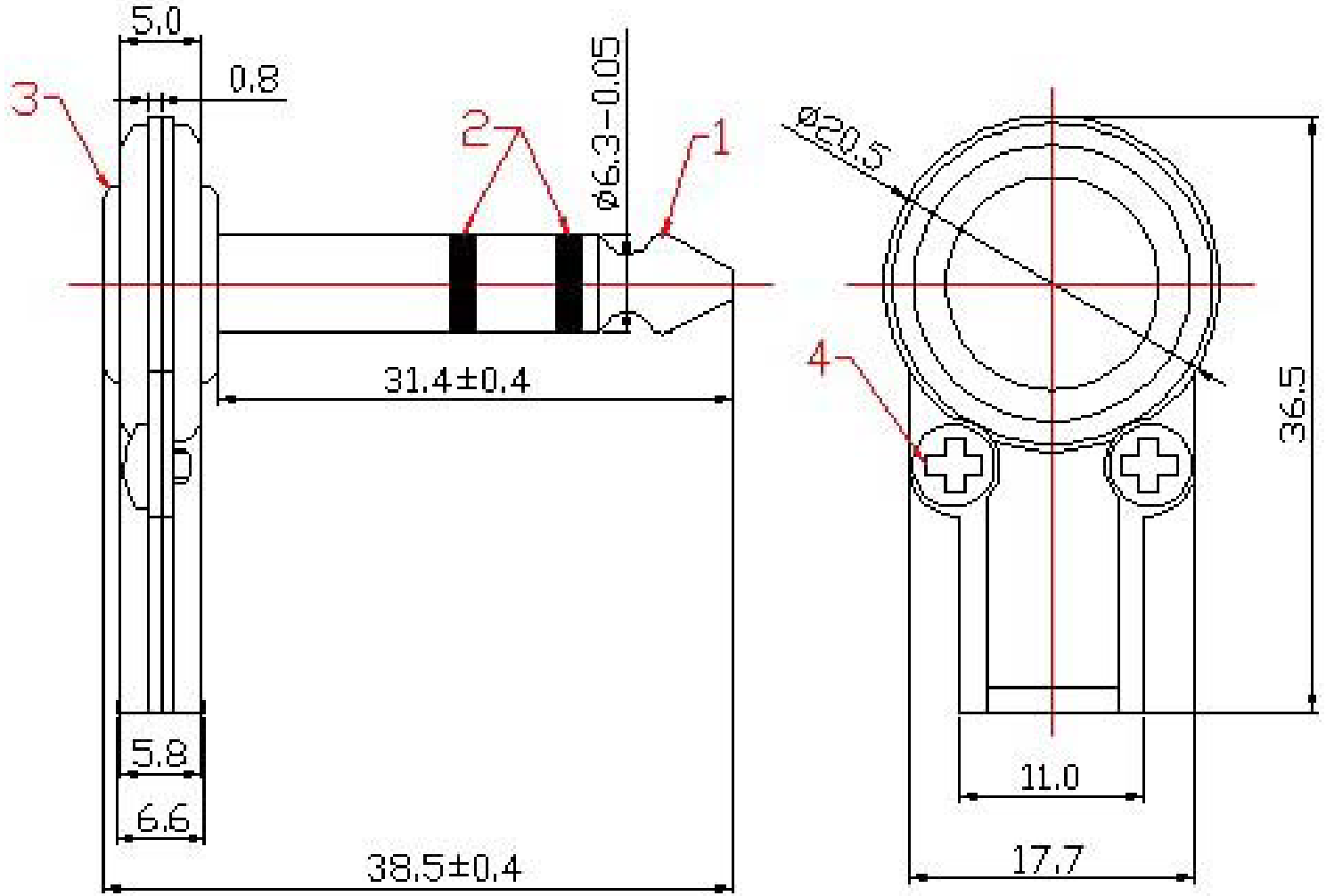

4	SCREW	Fe
3	SHELL	Fe
2	DIELECTRIC	POM
1	FRONT POINT	Zn
ITEM	DESIGNATION	MATERIAL

REV	PART NO. & SAMPLE NO.	DATE	BY
A	1023A		
B			

TOLERANCE	SIGNATURES		DATE
	DRAFT: YangYongRui		05.11.09
	CHECKED: HuGongXue		
	APPROVAL:		
SHEET	SCALE	UNIT	REV
OF	1:1	mm	Ø

大 廣 有 限 公 司
DA KOANG CO., LTD.

TITLE: 1/4" Stereo Plug, Right Angle Type W/Shielded Handle

CUSTOMER