變更記號	變更日期	ECN NO.	REV.	說 明	擔當者
△1					

正式

RoHS Compliant

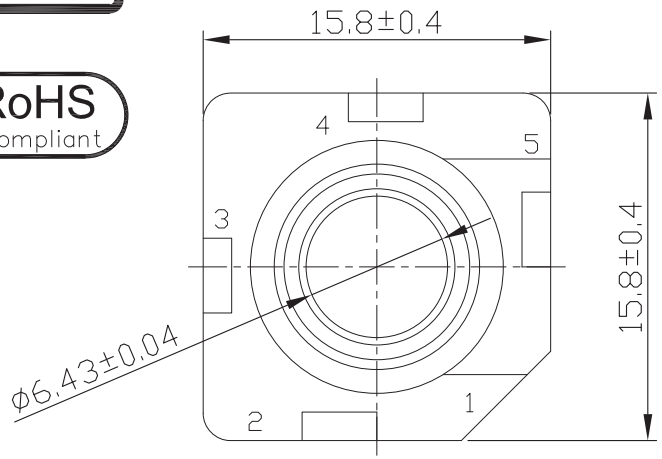

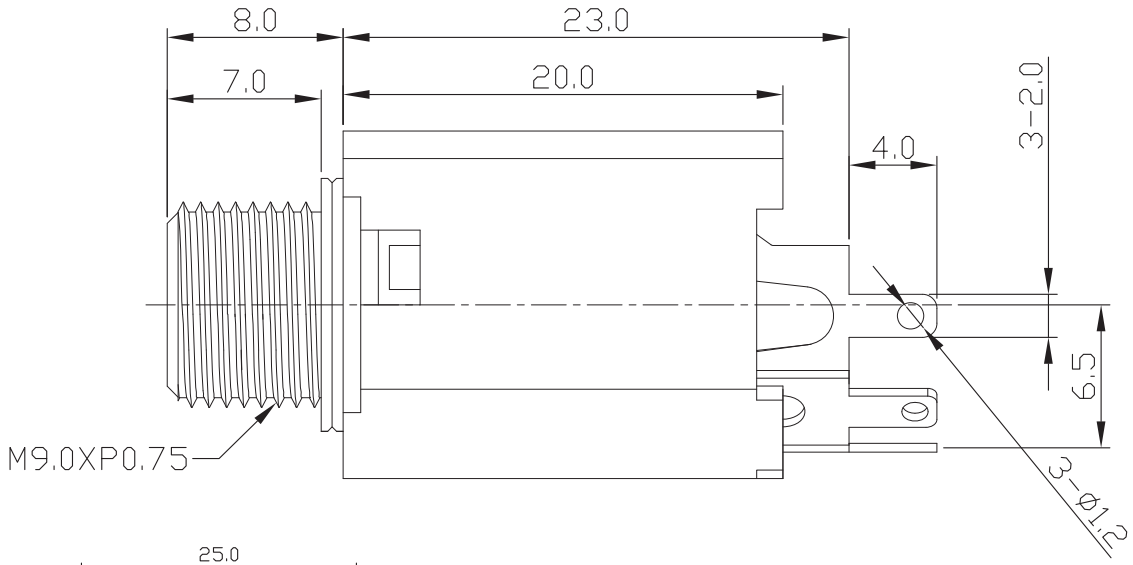

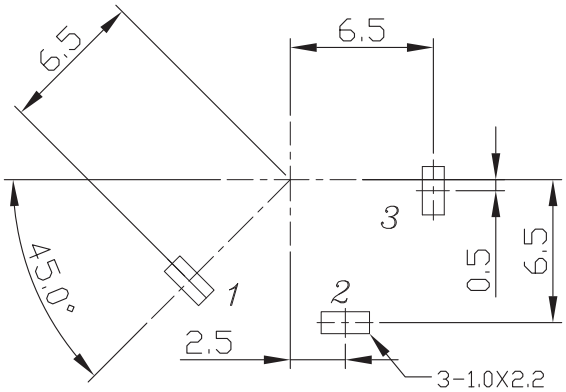

P.C.B LAYOUT(±0.1)
(BOTTOM VIEW)

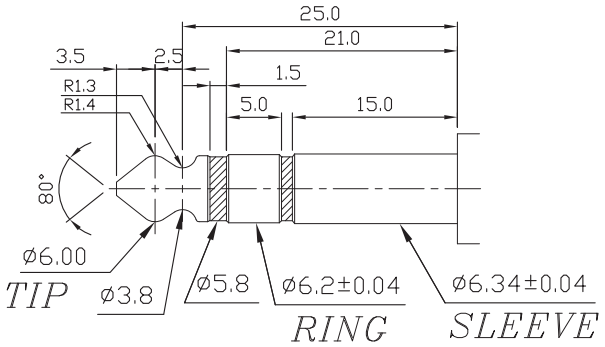

PLUG

C:Nut specification

Code No.	A
Specification	Iron M9 9x12x2mm

D:Washer specification

Code No.	A
Specification	9.6x13.2x0.5mm

F:Schematic:

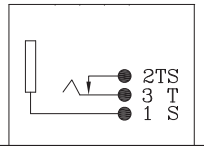

NO	PART NAME	Q'TY	MATERIAL	PLATING & COLOR
5	HOUSING	1	P.B.T	BLACK
4	SCREW	1	BRASS	Ni
3	TIP	1	P.B.S	Ag
2	TIP SHUNT	1	BRASS	Ni/Ag
1	SLEEVE	1	BRASS	Ag

UNLESS OTHERWISE SPECIFED TOLERANCES

DECIMALS：
X ：±0.50
X.X ：±0.30
X.XX ：±0.15

ANGLES：
X° ±5°
X.X° ±3°

大廣有限公司 DA KOANG CO., LTD.

PART NAME	6.4mm PHONE JACK			DRAWN DATE	2008. 10. 13
MATERIAL	PAPT NO：2033A			APPROVED	Jacky
THICKNESS	SCALE：3：1	SIZE：A4	UNIT：mm	CHECKED	Jacky
PLATED COLOR		REV：A	SHEET：1 of 1	DRAWN	Roy