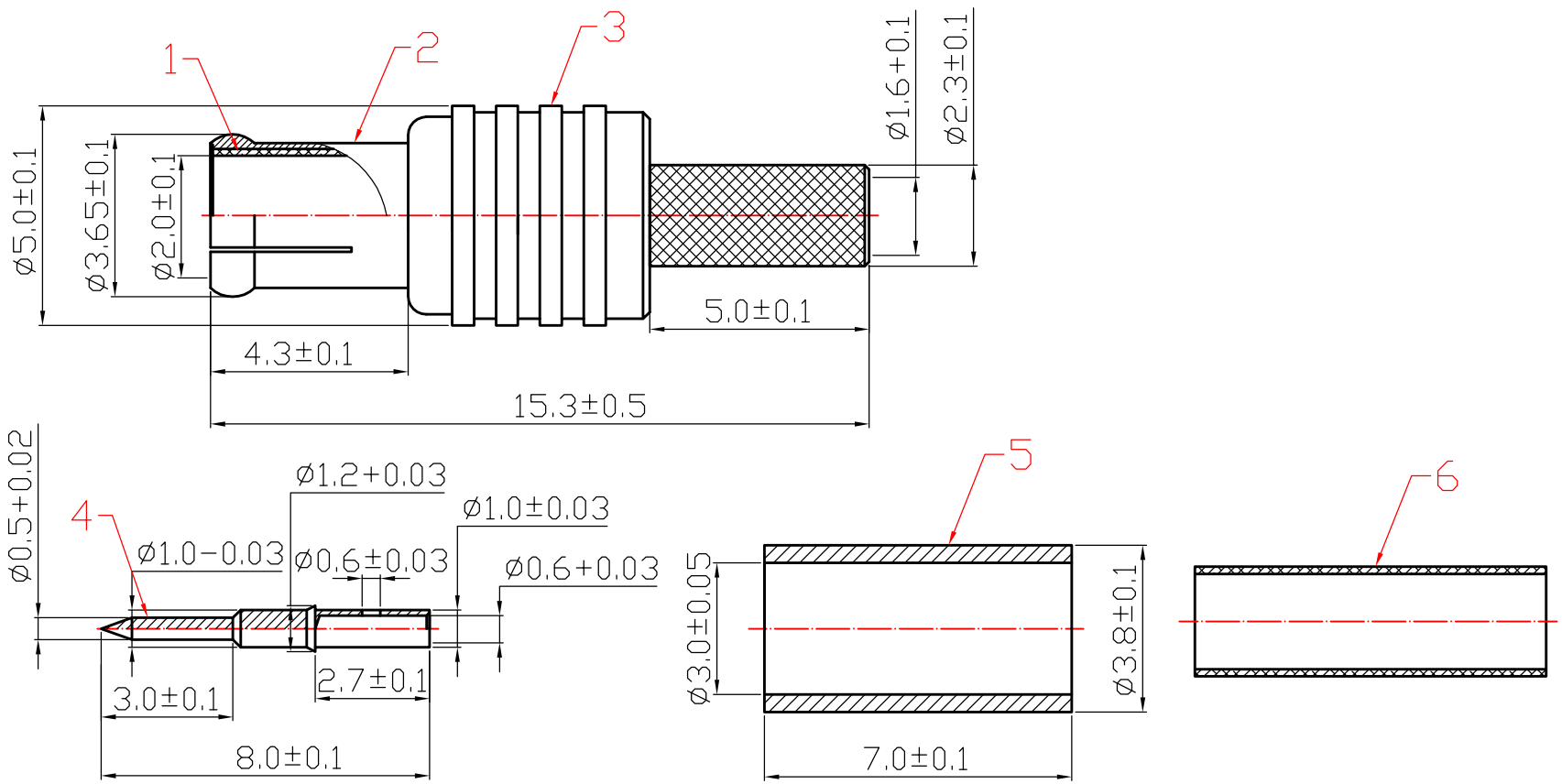

ITEM	DESIGNATION	MATERIAL
6	PLASTIC TUBE	PVC
5	COPPER TUBE	Cu
4	PIN	Cu
3	BODY	Cu
2	COPPER HEAD	Cu
1	DIELECTRIC	TEF

REV.	ECO	PART NO.& SAMPLE NO.	DATE	BY
A		1485		
B				

TOLERANCE	
0 – 10	±0.05
10 – 99	±0.5
100 – 999	±10.0
1000 – 9999	±100.00
10000 – 99999	±1000.00

SIGNATURES	DATE
DRAFT: LIANG GUO YAO	08.02.13
CHECKED:	
APPROVAL:	

SHEET	SCALE	UNIT	REV.
OF	1:1	mm	ø

大 廣 有 限 公 司
DA KOANG CO., LTD.

TITLE: MCX Male Crimp Type /174U Gold Plated

CUSTOMER: