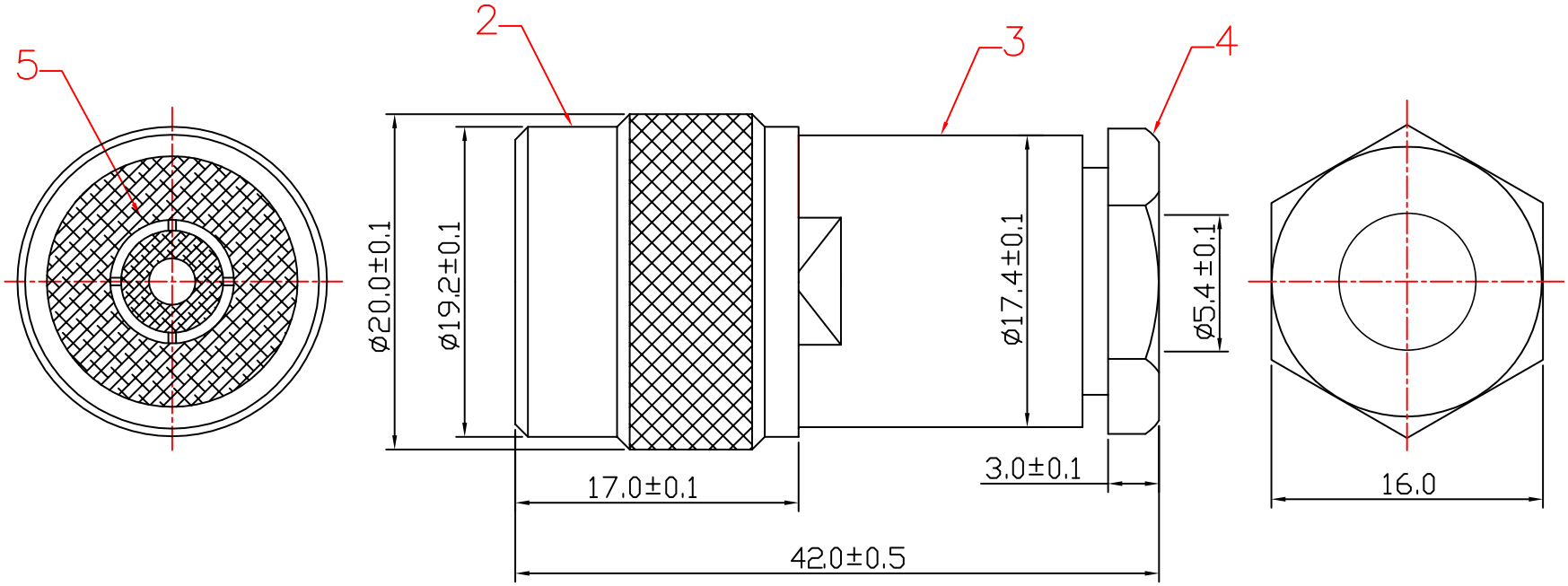

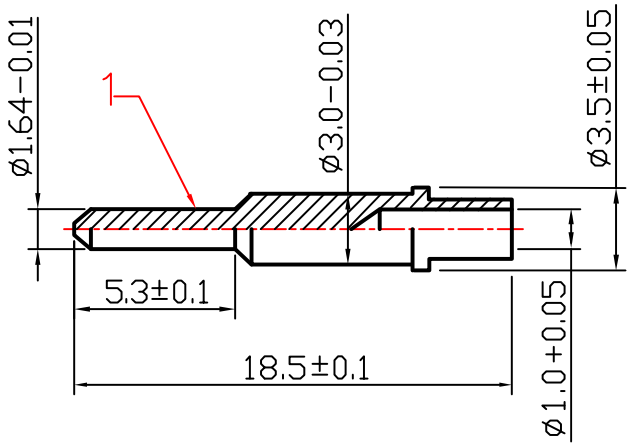

ITEM	DESIGNATION	MATERIAL
5	INSULATOR	POM
4	BACK COVER	BRASS
3	BODY	BRASS
2	SHELL	BRASS
1	PIN	BRASS

TOLERANCE	
0 – 10	±0.05
10 – 99	±0.5
100 – 999	±10.0
1000 – 9999	±100.00
10000 – 99999	±1000.00

SIGNATURES	DATE
DRAFT: **YangYongRui**	**05.09.20**
CHECKED: **HuGongXue**	
APPROVAL:	

大 廣 有 限 公 司
DA KOANG CO., LTD.

REV.	ECO	PART NO.	DATE	BY
A0		1180A		
B				

SHEET	SCALE	UNIT	REV.
OF	1:1	mm	ø

TITLE	N Male Clamp Type(58U)
CUSTOMER	